SIERRA PACIFIC WINDOWS

Energy Saver Clad Outswing Patio Door
5-Point Locking System
3-2 / 3-2 x 8-3 Dual Swing (75.50" X 98.50")
(Qualifies Single, Dual & Fixed Configurations)
Nail Fin Install, WDMA Instructions / Non-Impact

CCL Listing #436-H-611.74,.76	Architectural Testing, Inc., Test # E1434.01-602-44 Specimen #2

Energy Saver Clad Outswing Patio Door, 5-Point Locking System
Nail Fin Install, WDMA Instructions / Non-Impact

SHEET: 1 OF 2		UPDATED: 3/07/2018	DRAWN BY: B.K.

TEST REPORT SUMMARY:

- MAXIMUM OVERALL DOOR FRAME SIZE: **75.50" (1918mm) x 98.50" (2502mm)**
- OVERALL DESIGN PRESSURE: **± 40**
- RATING: **LC-PG40-SHD**
- STRUCTURAL TEST PRESSURE: **± 60.15**

INSTALLATION NOTES:

1. USE 2" x _ WOOD BUCK

2. 1/4" MAXIMUM SHIM SPACE AT JAMBS. 1/2" MAXIMUM SHIM SPACE AT HEAD
- PLACE WOOD SHIM EVERY 6-10"

3. APPLY A CONTINUOUS BEAD OF SEALANT BETWEEN THE NAIL FIN AND THE BUCK, AT HEAD, JAMBS AND SILL

- PRIOR TO INSTALLING DOOR, PLACE (3) ROWS OF 1/4" Ø CONTINUOUS BEADS OF SILICONE AT SILL IN LOCATIONS INDICATED.
APPLY AT INSIDE EDGE, MIDDLE AND OUTSIDE EDGE OF SILL, WHERE THE DOOR SILL WILL COME IN CONTACT WITH SEALANT.

4. INSTALL #8 X 1 1/4" (MINIMUM) PPH SS SCREWS SPACED APPROXIMATELY 7" FROM EACH CORNER AND 7" ON CENTER THEREAFTER THROUGH THE NAIL FIN AND INTO THE FRAMING MATERIAL, SILICONE SEAL OVER SCREW HEADS. PUT A CONTINUOUS BEAD OF SILICONE ACROSS ENTIRE LENGTH OF THE HEAD & JAMBS NAIL FIN.

5. 1" MINIMUM FASTENER EMBEDMENT INTO FRAMING MATERIAL

6. MAXIMUM DOOR FRAME SIZE: **112.63" (1918mm) x 98.50" (2502mm)**

7. REPLACE ONE EXISTING SCREW IN **EACH** HINGE (8 TOTAL HINGES) WITH A #10 X 2-1/2" LONG PFH SCREW (SCREWS PROVIDED BY SIERRA PACIFIC WINDOWS). INSTALL SCREW THRU THE HINGE INTO THE SIDE JAMB & FRAMING MATERIAL.

8. INSTALL THE HEAD STRIKE PLATE WITH QTY (3) #10 X 2-1/2" LONG PFH SS SCREWS (SCREWS PROVIDED BY OTHERS). SCREWS ARE TO GO THRU THE STRIKE PLATE INTO THE HEAD AND INTO THE FRAMING MATERIAL.

9. INSTALL THE PVC SILL STRIKE PLATE WITH QTY (2) #6 X 2-3/4" LONG PFH SS SCREWS. SCREWS ARE TO GO THRU THE STRIKE PLATE INTO THE SILL AND INTO THE FRAMING MATERIAL.

10. INSTALL THE METAL SILL STRIKE PLATE (LOCATED ON TOP OF THE PVC STRIKE) WITH QTY (3) #10 X 2-1/2" LONG PFH SS SCREWS. SCREWS ARE TO GO THRU THE STRIKE PLATE INTO THE SILL AND INTO THE FRAMING MATERIAL.

- Check rough opening for proper size, plumb, level and square.
- Make all necessary adjustments to ensure rough opening is plumb, level & square.
- Sill must be flat, level and capable of supporting the weight of the unit.
- Opening should allow a maximum of 1/4 shim space at head and 1/4" at each jamb.
- Wood buck, framing, fasteners, sealant and all wall system materials are provided by others, unless otherwise specified.

2 WIDE PANEL DUAL OUTSWING VERTICAL SECTION

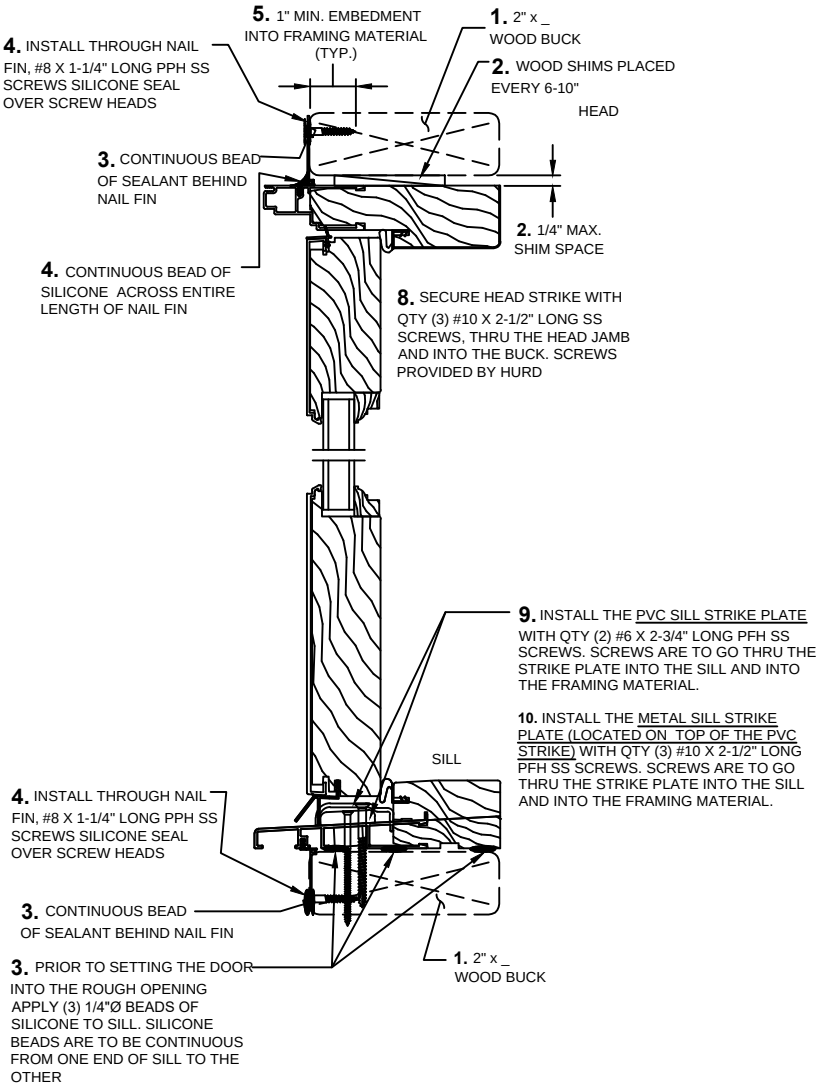

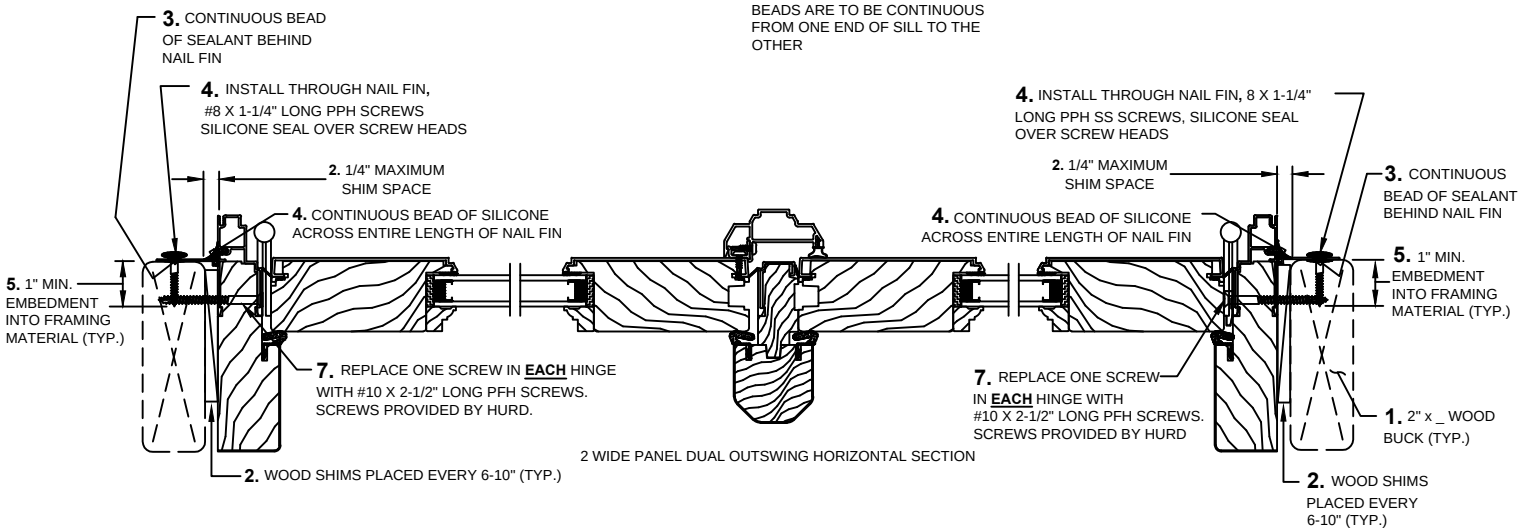

2 WIDE PANEL DUAL OUTSWING HORIZONTAL SECTION

Installation requirements may vary in particular locations and in other types of construction. Proper installation is essential, and Sierra Pacific Windows, recommends consultation with an AAMA Certified Installer, or other qualified, registered building professional before installation of any Sierra Pacific product. Proper installation of Sierra Pacific products is the responsibility of the installer. Sierra Pacific is not responsible for proper installation. Sierra Pacific is not responsible for the design of, conditions in, or performance of building construction beyond the perimeters of the Sierra Pacific units. Sierra Pacific is not responsible for proper integration of the Sierra Pacific units with the weather-repellent systems of the building.

SIERRA PACIFIC WINDOWS

Energy Saver Clad Outswing Patio Door
5-Point Locking System
3-2 / 3-2 x 8-3 Dual Swing (75.50" X 98.50")
(Qualifies Single, Dual & Fixed Configurations)
Nail Fin Install, WDMA Instructions / Non-Impact

CCL Listing #436-H-611.74,.76 | Architectural Testing, Inc., Test # E1434.01-602-44 Specimen #2

Energy Saver Clad Outswing Patio Door, 5-Point Locking System
Nail Fin Install, WDMA Instructions / Non-Impact

SHEET: 2 OF 2 | UPDATED: 3/07/2018 | DRAWN BY: B.K.

TEST REPORT SUMMARY:

- MAXIMUM OVERALL DOOR FRAME SIZE: **75.50" (1918mm) x 98.50" (2502mm)**
- OVERALL DESIGN PRESSURE: **± 40**
- RATING: **LC-PG40-SHD**
- STRUCTURAL TEST PRESSURE: **± 60.15**

ANCHOR REQUIREMENTS TABLE

THROUGH NAIL FIN, HINGES, and STRIKES INSTALLATION with SCREWS

OPENING TYPE (SUBSTRATE)	FRAME TO OPENING FASTENER TYPE, FASTENER SPACING	MINIMUM EMBED	MINIMUM EDGE DIST.
2X_ WOOD BUCK	• **4. NAIL FIN -** #8 X 1-1/4" Long PPH SS screws spaced 7" from each corner & 7" on center thereafter. • **7. EACH HINGE QTY (1) -** #10 X 2-1/2" PFH SS Screw through each hinge plate • **8. HEAD STRIKE QTY (3) -** #10 X 2-1/2" PFH Screws through the head strike plate • **9. PVC SILL STRIKE QTY (2) -** #6 X 2-3/4" PFH Screws through the PVC sill strike plate • **10. METAL SILL STRIKE QTY (3) -** #10 X 2-1/2" PFH Screws through the Metal sill strike plate	1"	3/4"

ANCHORS MUST BE INTO A MIN. 2X_ FRAME OR BUCK . IF SPACE BETWEEN WALL FRAME & WINDOW FRAME IS GREATER THAN THAT REQUIRED FOR A 2X_FRAME OR BUCK AND A SPACE EXISTS, THE SPACE MUST BE FILLED WITH A WOOD MEMBER OF EQUAL DEPTH TO THE WINDOW FRAME MEMBER OR BUCK AND OF LENGTH = MIN. 20". THE FRAME ANCHOR MUST THEN BE RUN THROUGH THE FRAME & WOOD SHIM AND INTO THE OPENING.

ELEVATION SHOWING FASTENER LOCATION & SPACING (TYP.)

MAXIMUM DOOR FRAME SIZE
75.50" (1918mm) x 98.50" (2502mm)
PANEL SIZE = 35.88" X 96"

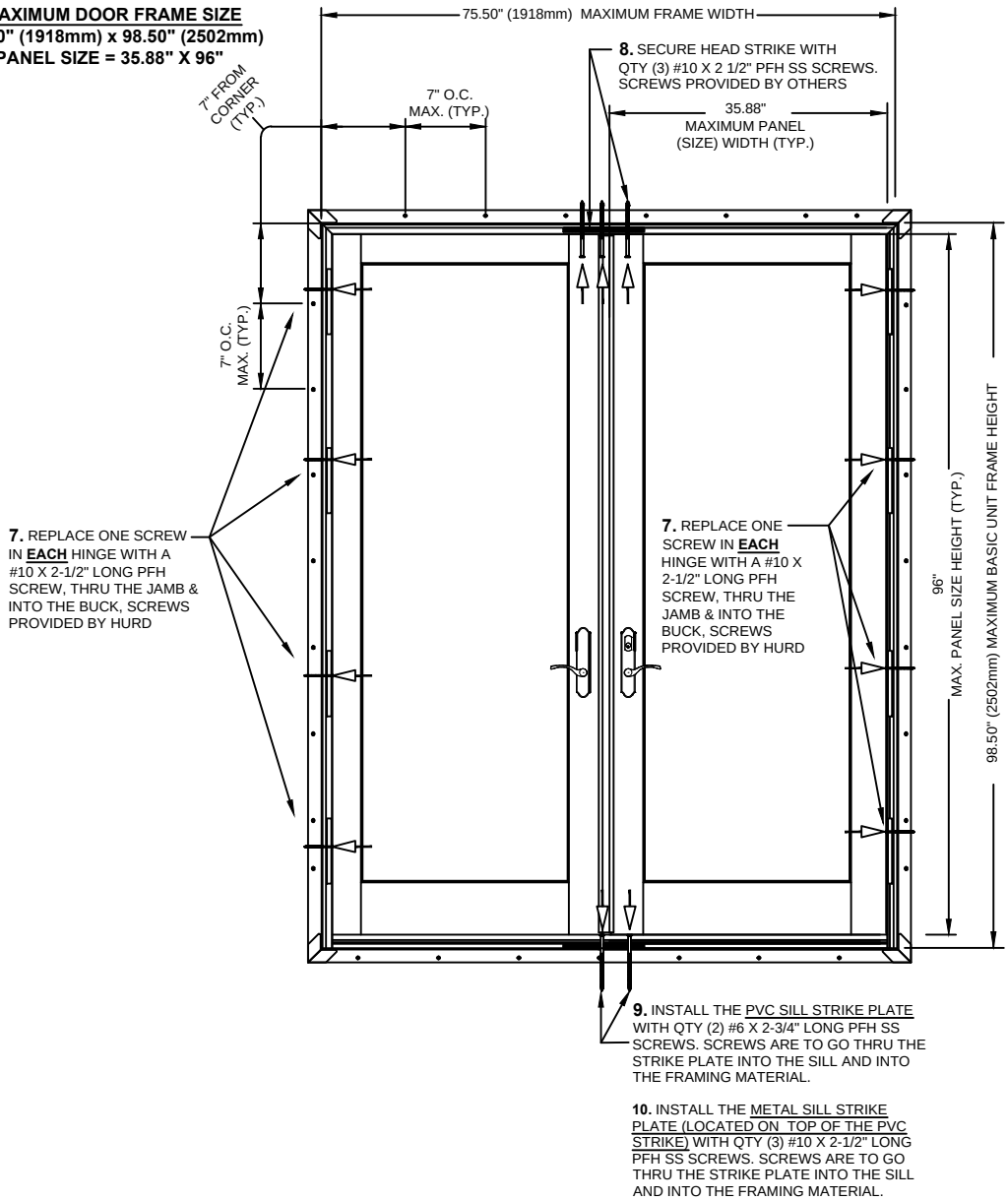

Installation requirements may vary in particular locations and in other types of construction. Proper installation is essential, and Sierra Pacific Windows, recommends consultation with an AAMA Certified Installer, or other qualified, registered building professional before installation of any Sierra Pacific product. Proper installation of Sierra Pacific products is the responsibility of the installer. Sierra Pacific is not responsible for proper installation. Sierra Pacific is not responsible for the design of, conditions in, or performance of building construction beyond the perimeters of the Sierra Pacific units. Sierra Pacific is not responsible for proper integration of the Sierra Pacific units with the weather-repellent systems of the building.